Pressure contact
Low switching losses
Low reverse recovery charge
High power cycling capability
Distributed amplified gate for high di_T/dt

Fast Inverter Stud Thyristor
Type TFI261-160-14

Mean on-state current				I_{TAV}	160 A		
Repetitive peak off-state voltage				V_{DRM}	800...1400 V		
Repetitive peak reverse voltage				V_{RRM}			
Turn-off time				t_q	20.0, 25.0, 32.0, 40.0 µs		
V_{DRM}, V_{RRM}, V	800	900	1000	1100	1200	1300	1400
Voltage code	8	9	10	11	12	13	14
T_j, °C	–60...+125						

MAXIMUM ALLOWABLE RATINGS

Symbols and parameters		Units	Values	Test conditions	
ON-STATE					
I_{TAV}	Maximum allowable mean on-state current	A	156 160 233	T_c=85 °C; T_c=83 °C; T_c=55 °C; 180° half-sine wave; 50 Hz	
I_{TRMS}	RMS on-state current	A	251	T_c=83 °C; 180° half-sine wave; 50 Hz	
I_{TSM}	Surge on-state current	kA	5.5 6.5	T_j=$T_{j\,max}$ T_j=25 °C	180° half-sine wave; t_p=10 ms; single pulse; V_D=V_R=0 V; Gate pulse: I_G=2 A; V_G=20 V; t_{GP}=50 µs; di_G/dt=1 A/µs
			6.0 7.0	T_j=$T_{j\,max}$ T_j=25 °C	180° half-sine wave; t_p=8.3 ms; single pulse; V_D=V_R=0 V; Gate pulse: I_G=2 A; V_G=20 V; t_{GP}=50 µs; di_G/dt=1 A/µs
I^2t	Safety factor	$A^2s\cdot10^3$	150 210	T_j=$T_{j\,max}$ T_j=25 °C	180° half-sine wave; t_p=10 ms; single pulse; V_D=V_R=0 V; Gate pulse: I_G=2 A; V_G=20 V; t_{GP}=50 µs; di_G/dt=1 A/µs
			140 200	T_j=$T_{j\,max}$ T_j=25 °C	180° half-sine wave; t_p=8.3 ms; single pulse; V_D=V_R=0 V; Gate pulse:I_G=2 A; V_G=20 V; t_{GP}=50 µs; di_G/dt=1 A/µs
BLOCKING					
V_{DRM}, V_{RRM}	Repetitive peak off-state and Repetitive peak reverse voltages	V	800...1400	$T_{j\,min}$< T_j <$T_{j\,max}$; 180° half-sine wave; 50 Hz; Gate open	
V_{DSM}, V_{RSM}	Non-repetitive peak off-state and Non-repetitive peak reverse voltages	V	900...1500	$T_{j\,min}$< T_j <$T_{j\,max}$; 180° half-sine wave; single pulse; Gate open	
V_D, V_R	Direct off-state and Direct reverse voltages	V	$0.6\cdot V_{DRM}$ $0.6\cdot V_{RRM}$	T_j=$T_{j\,max}$; Gate open	

TRIGGERING				
I_{FGM}	Peak forward gate current	A	5	$T_j=T_{j\,max}$
V_{RGM}	Peak reverse gate voltage	V	5	
P_G	Gate power dissipation	W	3	$T_j=T_{j\,max}$ for DC gate current
SWITCHING				
$(di_T/dt)_{crit}$	Critical rate of rise of on-state current non-repetitive (f=1 Hz)	A/µs	1000	$T_j=T_{j\,max}$; $V_D=0.67 \cdot V_{DRM}$; $I_{TM}=320$ A; Gate pulse: $I_G=2$ A; $V_G=20$ V; $t_{GP}=50$ µs; $di_G/dt=2$ A/µs
THERMAL				
T_{stg}	Storage temperature	°C	–60...+50	
T_j	Operating junction temperature	°C	–60...+125	
MECHANICAL				
M	Tightening torque	Nm	20...30	
a	Acceleration	m/s^2	100	

CHARACTERISTICS

Symbols and parameters		Units	Values	Conditions	
ON-STATE					
V_{TM}	Peak on-state voltage, max	V	1.85	$T_j=25$ °C; $I_{TM}=502$ A	
$V_{T(TO)}$	On-state threshold voltage, max	V	1.123	$T_j=T_{j\,max}$; $0.5\,\pi\,I_{TAV} < I_T < 1.5\,\pi\,I_{TAV}$	
r_T	On-state slope resistance, max	mΩ	1.524		
I_H	Holding current, max	mA	250	$T_j=25$ °C; $V_D=12$ V; Gate open	
BLOCKING					
I_{DRM}, I_{RRM}	Repetitive peak off-state and Repetitive peak reverse currents, max	mA	50	$T_j=T_{j\,max}$; $V_D=V_{DRM}$; $V_R=V_{RRM}$	
$(dv_D/dt)_{crit}$	Critical rate of rise of off-state voltage[1)], min	V/µs	200, 320, 500, 1000, 1600, 2000, 2500	$T_j=T_{j\,max}$; $V_D=0.67 \cdot V_{DRM}$; Gate open	
TRIGGERING					
V_{GT}	Gate trigger direct voltage, max	V	3.00 2.50 1.50	$T_j=T_{j\,min}$ $T_j=25$ °C $T_j=T_{j\,max}$	$V_D=12$ V; $I_D=3$ A; Direct gate current
I_{GT}	Gate trigger direct current, max	mA	400 250 150	$T_j=T_{j\,min}$ $T_j=25$ °C $T_j=T_{j\,max}$	
V_{GD}	Gate non-trigger direct voltage, min	V	0.70	$T_j=T_{j\,max}$; $V_D=0.67 \cdot V_{DRM}$; Direct gate current	
I_{GD}	Gate non-trigger direct current, min	mA	55.00		
SWITCHING					
t_{gd}	Delay time, max	µs	0.70	$T_j=25$ °C; $V_D=600$ V; $I_{TM}=I_{TAV}$; di/dt=200 A/µs; Gate pulse: $I_G=2$ A; $V_G=20$ V; $t_{GP}=50$ µs; $di_G/dt=2$ A/µs	
t_{gt}	Turn-on time[2)], max	µs	1.60, 2.00, 2.50, 3.20		
t_q	Turn-off time[3)], max	µs	20.0, 25.0, 32.0, 40.0	$dv_D/dt=50$ V/µs; $T_j=T_{j\,max}$; $I_{TM}=I_{TAV}$; $di_R/dt=-10$ A/µs; $V_R=100$V; $V_D=0.67\,V_{DRM}$	
Q_{rr}	Recovered charge, max	µC	150	$T_j=T_{j\,max}$; $I_{TM}=I_{TAV}$; $di_R/dt=-50$ A/µs; $V_R=100$ V	
t_{rr}	Reverse recovery time, max	µs	3.0		
I_{rr}	Reverse recovery current, max	A	100		

THERMAL				
R_{thjc}	Thermal resistance, junction to case, max	°C/W	0.150	Direct current
MECHANICAL				
m	Weight, max	g	280	
D_s	Surface creepage distance	mm (inch)	12.4 (4.882)	
D_a	Air strike distance	mm (inch)	12.4 (4.882)	

PART NUMBERING GUIDE

TFI	261	160	14	A2	H3	K4	N
1	2	3	4	5	6	7	8

1. Fast Inverter Thyristor
2. Design version
3. Mean on-state current, A
4. Voltage code
5. Critical rate of rise of off-state voltage
6. Group of turn-off time (dv_D/dt=50 V/µs)
7. Group of turn-on time
8. Ambient conditions: N – normal; T – tropica

NOTES

1) Critical rate of rise of off-state voltage

Symbol of Group	P2	K2	E2	A2	T1	P1	M1
$(dv_D/dt)_{crit}$, V/µs	200	320	500	1000	1600	2000	2500

2) Turn-on time

Symbol of group	T4	P4	M4	K4
t_{gt}, µs	1.60	2.00	2.50	3.20

3) Turn-off time (dv_D/dt=50 V/µs)

Symbol of group	P3	M3	K3	H3
t_q, µs	20.0	25.0	32.0	40.0

OVERALL DIMENSIONS

Package type: T.SA1

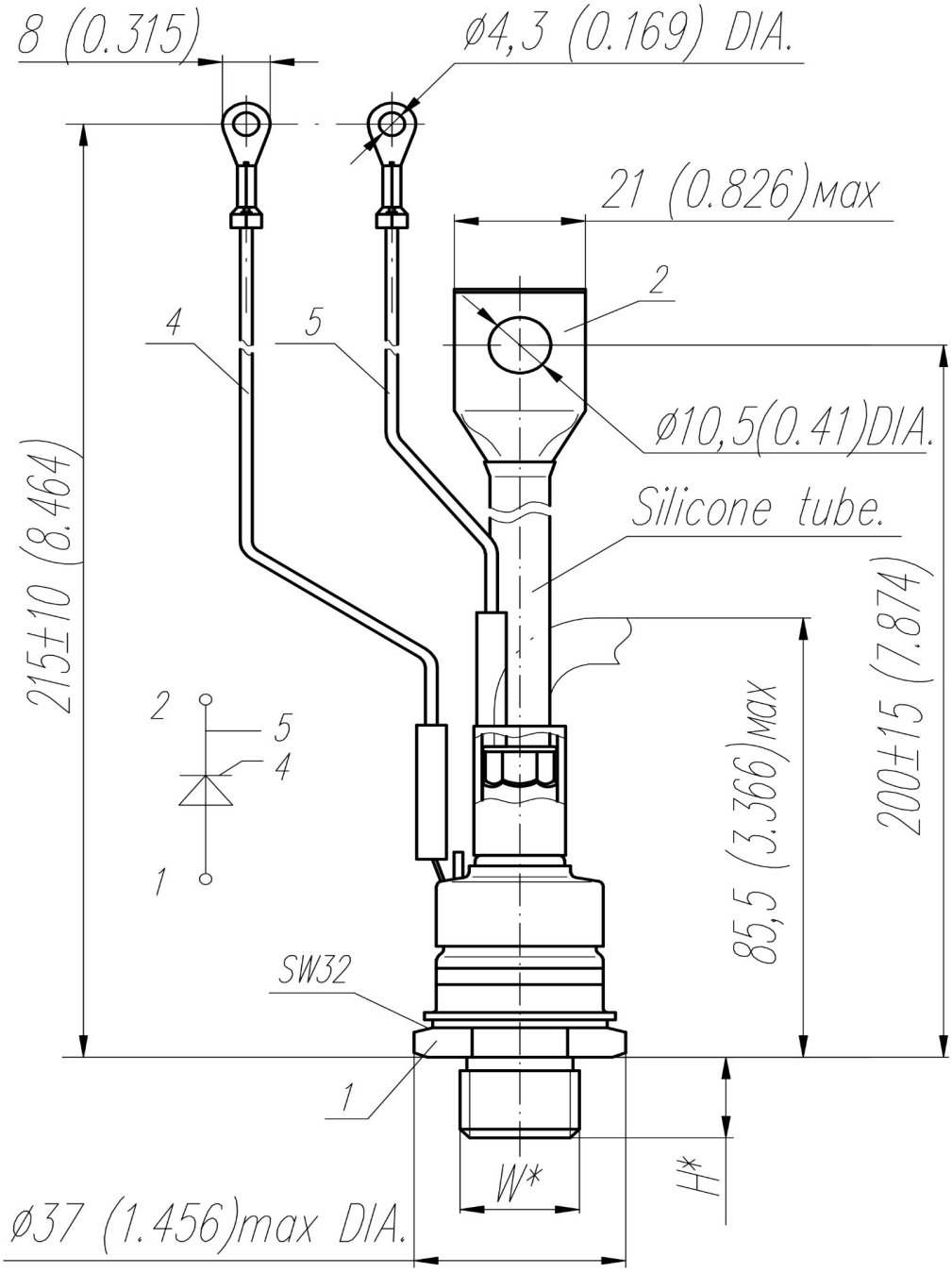

Type of screw	W	H
Metric Screw Type A	M16x1,5 – 8g	13
Metric Screw Type B (upon request)	M20x1,5 – 8g	15

Polarity	Example of code designation	Reference designation	Colors		
			Anode	Cathode	Gate
Anode to stud	TFI261-160-14		-	Red tube	White

All dimensions in millimeters (inches)

The information contained herein is confidential and protected by Copyright.
In the interest of product improvement, Proton-Electrotex reserves the right to change data sheet without notice.