SKCD 46 C 120 I4F R



CAL-DIODE

I_F = 75 A

V_{RRM} = 1200 V

Size: 9,12 mm x 5,10 mm

SKCD 46 C 120 I4F R

Features

- max. junction 175 °C
- very low forward voltage drop
- positive temperature coefficient
- extreme soft recovery

Typical Applications*

- freewheeling diode for IGBT



SKCD

Absolute Maximum Ratings

Symbol	Conditions		Values	Unit
V_{RRM}	T_j = 25 °C, I_R = 0.12 mA		1200	V
$I_{F(AV)}$	T_c = 80 °C, T_j = 175 °C, F_i=PI/2		48	A
I_{FSM}	10 ms sin 180°	T_j = 25 °C	430	A
		T_j = 150 °C	430	A
T_{jmax}			175	°C

Electrical Characteristics

Symbol	Conditions	min.	typ.	max.	Unit
i^2t	T_j = 150 °C, sin 180°, 10 ms			925	A^2s
I_R	T_j = 25 °C, V_{RRM} = 1200 V			0.12	mA
	T_j = 150 °C, V_{RRM} = 1200 V		7.00	14.00	mA
V_F	T_j = 25 °C, I_F = 75 A		2.17	2.49	V
	T_j = 150 °C, I_F = 75 A		2.11	2.42	V
	T_j = 175 °C, I_F = 75 A		1.96	2.27	V
$V_{(TO)}$	T_j = 150 °C		0.90	1.10	V
r_T	T_j = 150 °C		16.1	17.70	mΩ
$V_{(TO)}$	T_j = 175 °C		0.82	0.98	V
r_T	T_j = 175 °C		15.20	17.30	mΩ

Dynamic Characteristics

Symbol	Conditions	min.	typ.	max.	Unit
t_{rr}	T_j = 150 °C, 75 A, 600 V, 1500 A/µs		0.5		µs
E_{rr}	T_j = 150 °C, 75 A, 600 V, 1500 A/µs		4.2		mJ
I_{rrm}	T_j = 150 °C, 75 A, 600 V, 1500 A/µs		58		A

Thermal Characteristics

Symbol	Conditions	min.	typ.	max.	Unit
T_j		-40		175	°C
T_{stg}		-40		175	°C
T_{solder}	10 min.			250	°C
T_{solder}	5 min.			320	°C
$R_{th(j-c)}$	Semitrans Assembly		0.66		K/W

Mechanical Characteristics

Symbol	Conditions	Values	Unit
Raster size		9,12 x 5,10	mm^2
Area total		46	mm^2
Anode	Metallization	bondable (Al)	
Cathode	Metallization	solderable (Ag/Ni)	
Wire bond		Al, typ. diameter = 300 µm	
Package		wafer frame	
Chips / Package		308	pcs

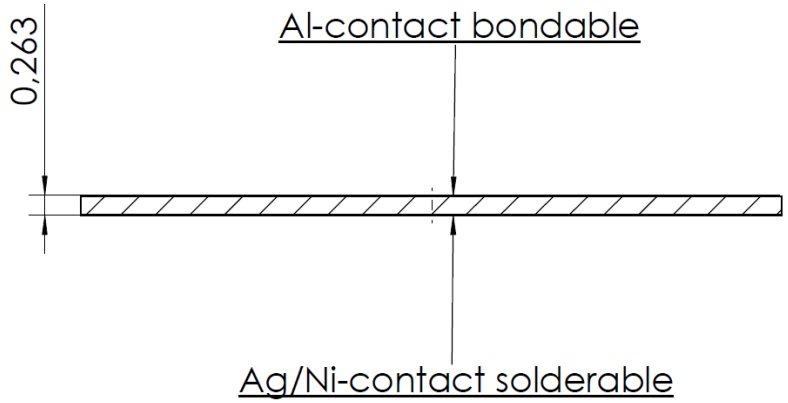

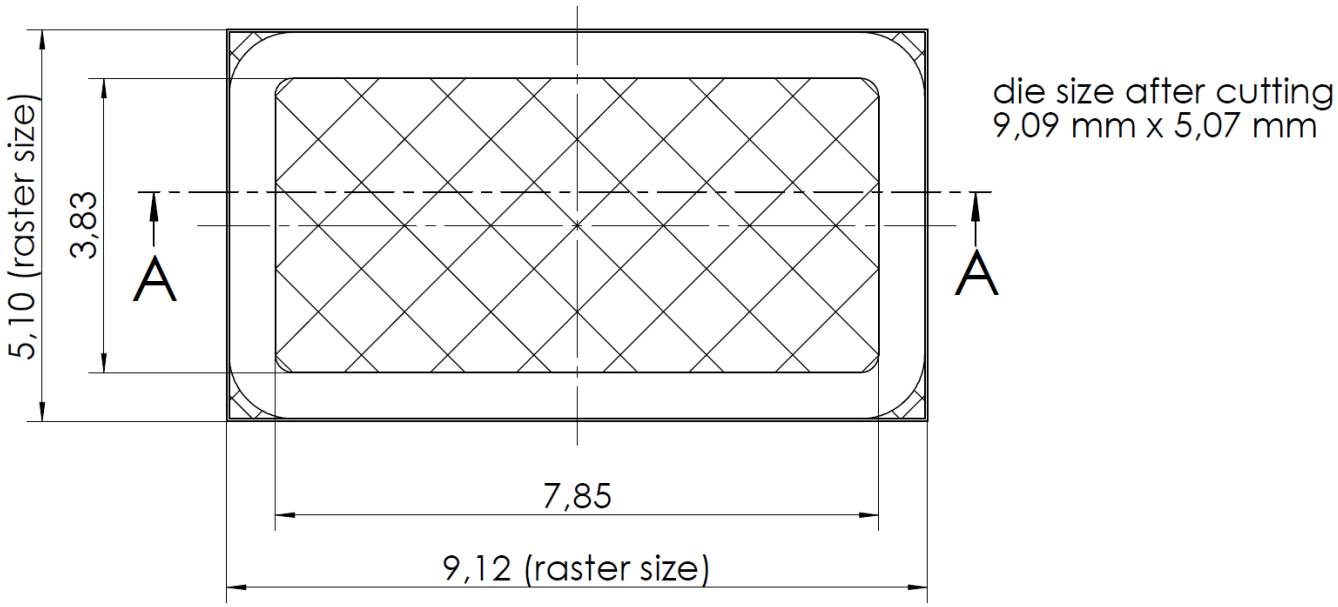

This is an electrostatic discharge sensitive device (ESDS), international standard IEC 60747-1, Chapter IX

* The specifications of our components may not be considered as an assurance of component characteristics. Components have to be tested for the respective application. Adjustments may be necessary. The use of SEMIKRON products in life support appliances and systems is subject to prior specification and written approval by SEMIKRON. We therefore strongly recommend prior consultation of our staff.

 © by SEMIKRON