SKCD 56 C170I4FV1

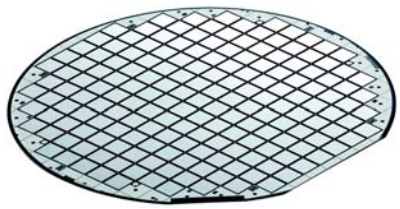

CAL-DIODE

I_F = 100 A [1)]
V_{RRM} = 1700 V
Size: 7.50 x 7.50 mm²

SKCD 56 C170I4FV1

Features*

- max. junction temperature 175 °C
- low forward voltage drop
- soft reverse recovery behavior
- low switching losses

Typical Applications

- freewheeling diode for IGBT

Footnotes

[1)] Nominal IGBT I_F rating, verified by design and characterization



SKCD

Absolute Maximum Ratings

Symbol	Conditions		Values	Unit
V_{RRM}	T_j = 25 °C, I_R = 0.085 mA		1700	V
I_{FSM}	10 ms sin 180°	T_j = 25 °C	650	A
		T_j = 150 °C	580	A
i^2t	T_j = 150 °C, t_p = 10 ms, sin 180°		1682	A^2s
T_{jmax}			175	°C

Electrical Characteristics

Symbol	Conditions	min.	typ.	max.	Unit
$I_{F(AV)}$	T_c = 80 °C, T_j = 175 °C, F_i=PI/2, $R_{th(j-c)}$ = 0.47 K/W, Semitrans Assembly		71		A
I_R	T_j = 25 °C, V_{RRM} = 1700 V			0.085	mA
	T_j = 150 °C, V_{RRM} = 1700 V			25.00	mA
V_F	T_j = 25 °C, I_F = 57 A		1.71	2.04	V
	T_j = 150 °C, I_F = 57 A		1.69	1.99	V
	T_j = 175 °C, I_F = 57 A		1.61	1.92	V
V_{F0}	T_j = 150 °C		1.08	1.22	V
r_F	T_j = 150 °C		10.70	13.51	mΩ
V_{F0}	T_j = 175 °C		1.01	1.19	V
r_F	T_j = 175 °C		10.53	12.81	mΩ

Dynamic Characteristics

Symbol	Conditions	min.	typ.	max.	Unit
E_{rr}	T_j = 25 °C, 100 A, 1200 V, 2000 A/µs		10.1		mJ
E_{rr}	T_j = 150 °C, 100 A, 1200 V, 2000 A/µs		22.2		mJ
Q_{rr}	T_j = 25 °C, 100 A, 1200 V, 2000 A/µs		16		µC
Q_{rr}	T_j = 150 °C, 100 A, 1200 V, 2000 A/µs		31.7		µC
I_{rrm}	T_j = 25 °C, 100 A, 1200 V, 2000 A/µs		84.1		A
I_{rrm}	T_j = 150 °C, 100 A, 1200 V, 2000 A/µs		130		A

Thermal Characteristics

Symbol	Conditions	min.	typ.	max.	Unit
T_j		-40		175	°C
T_{stg}		-40		175	°C
T_{solder}	10 min.			250	°C
T_{solder}	5 min.			320	°C

Mechanical Characteristics

Symbol	Conditions	Values	Unit
Raster size		7.50 x 7.50	mm^2
Area total		56	mm^2
Anode	Metallization	bondable (Al)	
Cathode	Metallization	solderable (Ag/Ni)	
Wire bond		Al, typ. diameter = 300 µm	
Chips / Package	150 mm wafer on frame	254	pcs

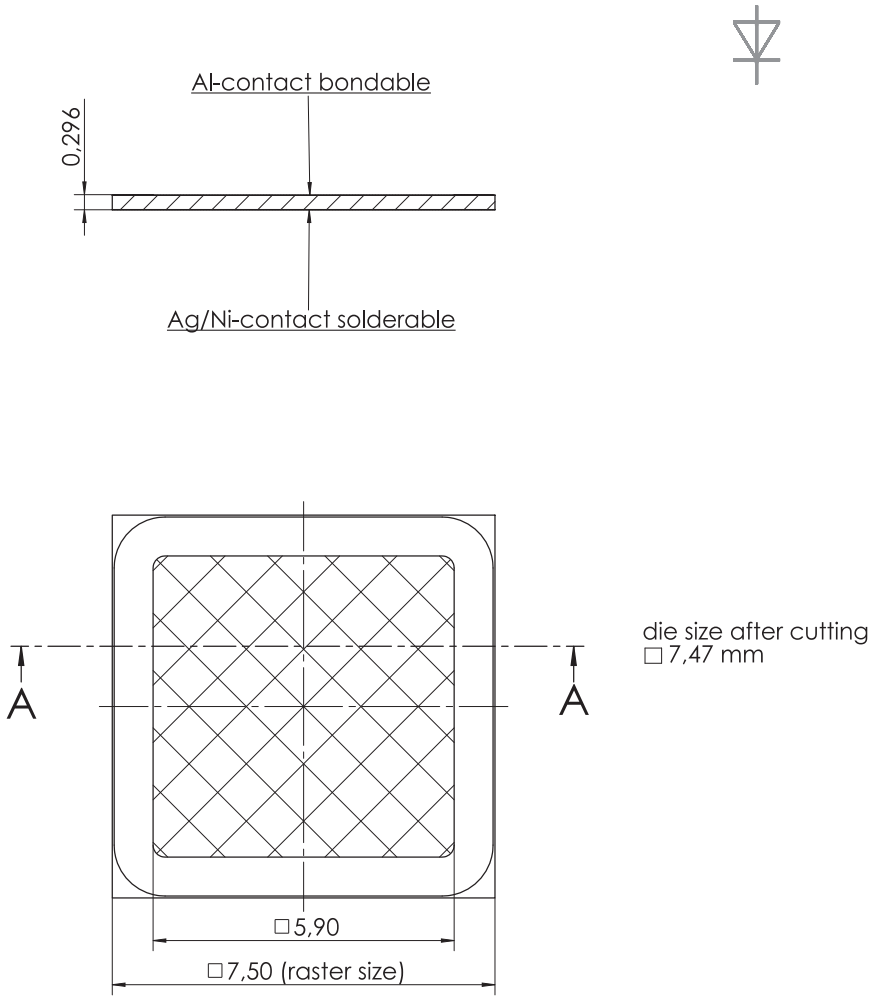

IMPORTANT INFORMATION AND WARNINGS

This is an electrostatic discharge sensitive device (ESDS) according to international standard IEC 61340.

*The specifications of Semikron Danfoss products may not be considered as any guarantee or assurance of product characteristics ("Beschaffenheitsgarantie"). The specifications of Semikron Danfoss products describe only the usual characteristics of Semikron Danfoss products to be expected in typical applications, which may still vary depending on the specific application. Therefore, products must be tested for the respective application in advance. Resulting from this, application adjustments of any kind may be necessary. Any user of Semikron Danfoss products is responsible for the safety of their applications embedding Semikron Danfoss products and must take adequate safety measures to prevent the applications from causing any physical injury, fire or other problem, also if any Semikron Danfoss product becomes faulty. Any user is responsible for making sure that the application design and realization are compliant with all laws, regulations, norms and standards applicable to the scope of application. Unless otherwise explicitly approved by Semikron Danfoss in a written document signed by authorized representatives of Semikron Danfoss, Semikron Danfoss products may not be used in any applications where a failure of the product or any consequences of the use thereof can reasonably be expected to result in personal injury. No representation or warranty is given and no liability is assumed with respect to the accuracy, completeness and/or use of any information herein, including without limitation, warranties of non-infringement of intellectual property rights of any third party. Semikron Danfoss does not convey any license under its or a third party's patent rights, copyrights, trade secrets or other intellectual property rights, neither does it make any representation or warranty of non-infringement of intellectual property rights of any third party which may arise from a user's applications.

 © by Semikron Danfoss