SKN 11000



Disc Diode

Rectifier Diodes

SKN 11000

Features

- High current rectifier diode in a slim package for lowest thermal resistance
- Capsule type metal-ceramic package with precious metal pressure contacts
- Low power dissipation and low thermal resistance
- Especially suited for water cooling and welding
- Available in matched groups for paralleling

Typical Applications

- Welding
- High current rectifiers
- Electroplating

1) DSC = Double Side Cooling
SSC = Single Side Cooling



SKN

V_{RSM} V	V_{RRM} V	I_{FRMS} = 18500 A (maximum value for cont. operation) I_{FAV} = 11500 A (sin. 180; T_c = 85ºC)
200	200	SKN 11000/02
400	400	SKN 11000/04

Symbol	Condition	Values	Units
I_{FAV}	sin. 180; T_c = 85 ºC sin. 180; T_c = 100 ºC	11500 10250	A A
I_{FSM}	T_{vj} = 25º C; 10 ms T_{vj} = 180º C; 10 ms	100 85	kA kA
i^2t	T_{vj} = 25º C; 8,3...10 ms T_{vj} = 180º C; 8,3...10 ms	50000 36100	kA^2s kA^2s
V_F $V_{F(TO)}$ r_T I_{RD}	T_{vj} = 25º C, I_F = 14 kA T_{vj} = 180º C T_{vj} = 180º C T_{vj} = 25º C; V_R = V_{RRM} T_{vj} = 180º C; V_R = V_{RRM}	max. 1,2 max. 0,68 max. 0,032 max. 4 max. 100	V V mΩ mA mA
$R_{th(j-c)}$ $R_{th(c-s)}$ T_{vj} T_{stg}	DSC 1) SSC 1) DSC / SSC 1)	5,2 10,5 3 / 6 -40...+180 -40...+180	K/kW K/kW K/kW °C °C
F a m	Mounting force (SI units) Mounting force (US units) approx.	39…48 8800…10800 5 * 9,81 215	kN lbf m/s² g
Case	Disc Ø75 x Ø57 x 8 mm	E36	

 © by SEMIKRON

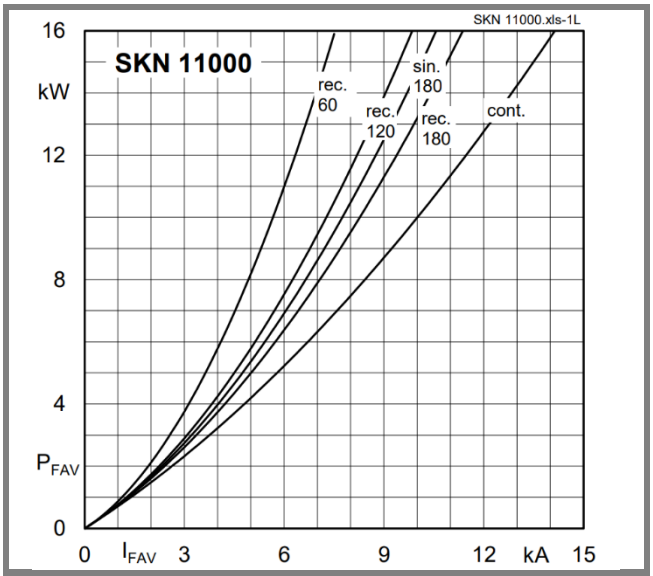

Fig. 1L Power dissipation vs. forward current

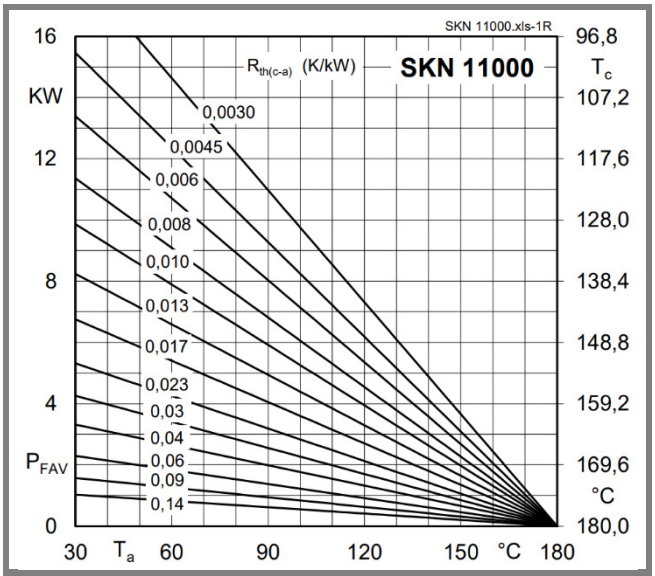

Fig. 1R Power dissipation vs. ambient temperature

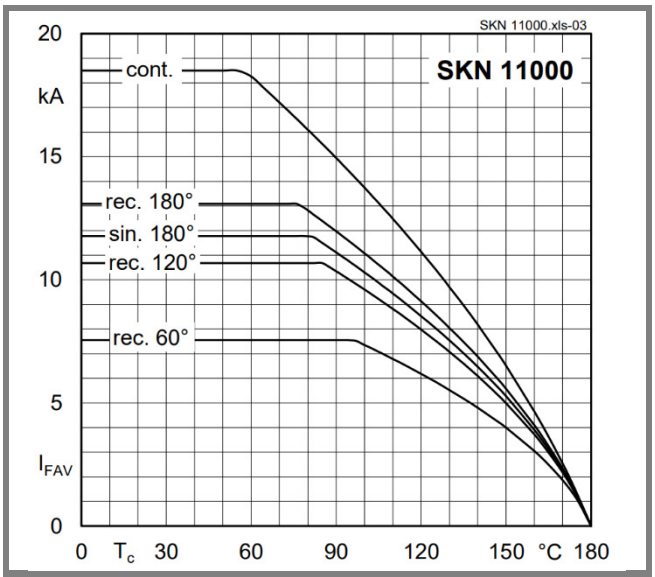

Fig. 3 Forward current vs. case temperature

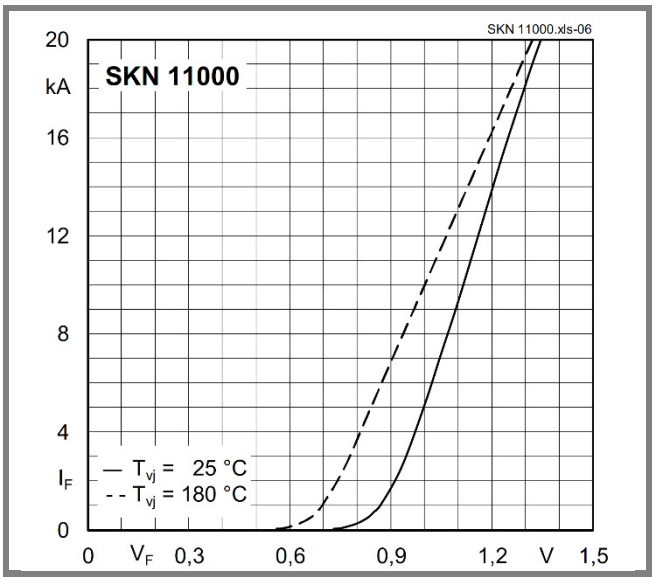

Fig. 6 Forward characteristics (maximum)

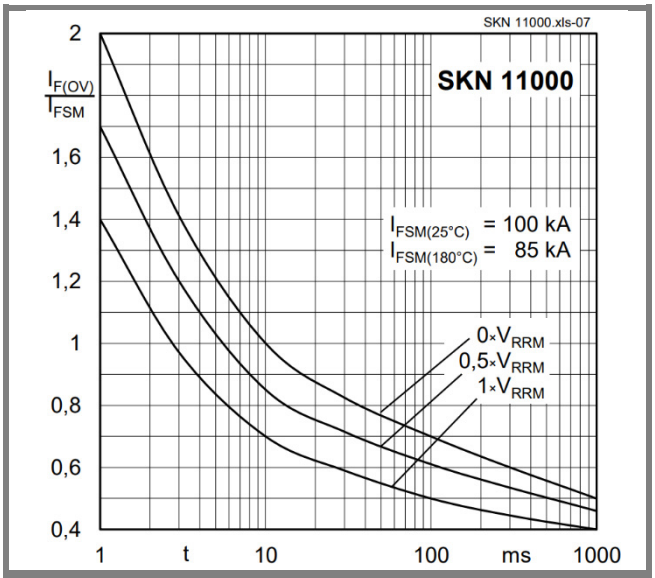

Fig. 7 Surge overload current vs. time

 © by SEMIKRON

Dimensions in mm

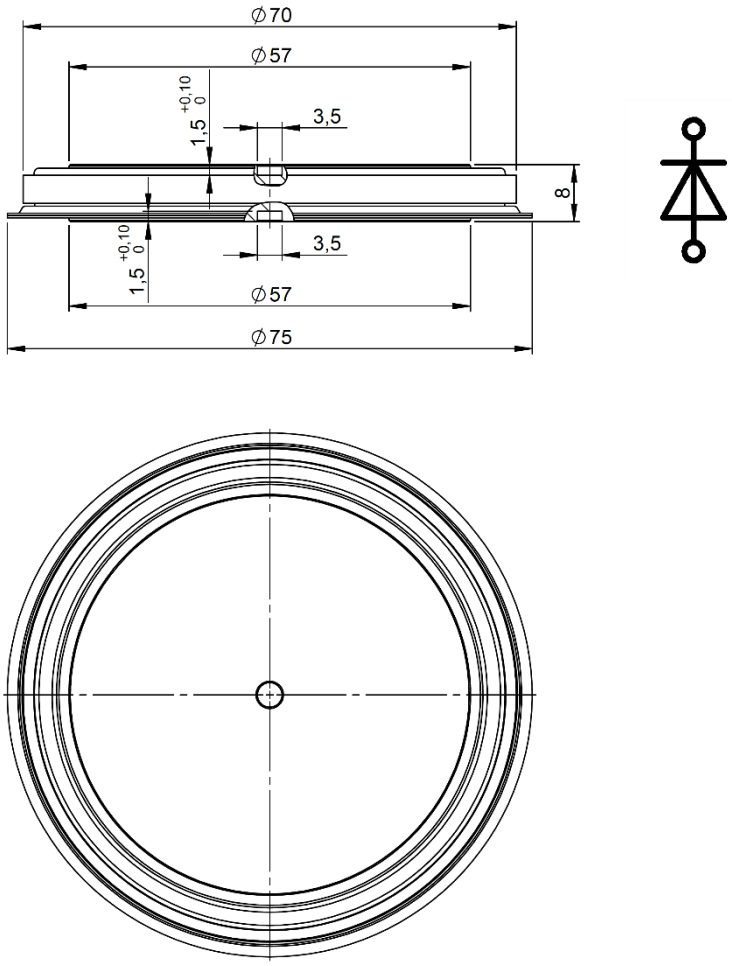

Case E36

*IMPORTANT INFORMATION AND WARNINGS

The specifications of SEMIKRON products may not be considered as guarantee or assurance of product characteristics ("Beschaffenheitsgarantie"). The specifications of SEMIKRON products describe only the usual characteristics of products to be expected in typical applications, which may still vary depending on the specific application. Therefore, products must be tested for the respective application in advance. Application adjustments may be necessary. The user of SEMIKRON products is responsible for the safety of their applications embedding SEMIKRON products and must take adequate safety measures to prevent the applications from causing a physical injury, fire or other problem if any of SEMIKRON products become faulty. The user is responsible to make sure that the application design is compliant with all applicable laws, regulations, norms and standards. Except as otherwise explicitly approved by SEMIKRON in a written document signed by authorized representatives of SEMIKRON, SEMIKRON products may not be used in any applications where a failure of the product or any consequences of the use thereof can reasonably be expected to result in personal injury. No representation or warranty is given and no liability is assumed with respect to the accuracy, completeness and/or use of any information herein, including without limitation, warranties of non-infringement of intellectual property rights of any third party. SEMIKRON does not assume any liability arising out of the applications or use of any product; neither does it convey any license under its patent rights, copyrights, trade secrets or other intellectual property rights, nor the rights of others. SEMIKRON makes no representation or warranty of non-infringement or alleged noninfringement of intellectual property rights of any third party which may arise from applications. Due to technical requirements our products may contain dangerous substances. For information on the types in question please contact the nearest SEMIKRON sales office. This document supersedes and replaces all information previously supplied and may be superseded by updates. SEMIKRON reserves the right to make changes.

 © by SEMIKRON