SKR 4,2 Qu bond



DIODE

$I_{F(DC)}$ = 35 A

V_{RRM} = 1600 V

Size: 4,2 mm x 4,2 mm

SKR 4,2 Qu bond

Features

- high current density due to mesa technology
- high surge current
- compatible to thick wire bonding
- compatible to all standard solder processes

Typical Applications*

- uncontrolled rectifier bridges

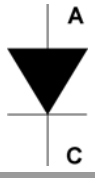

SKR

Absolute Maximum Ratings

Symbol	Conditions		Values	Unit
V_{RRM}	T_j = 25 °C, I_R = 0.05 mA		1600	V
$I_{F(AV)}$	T_s = 80 °C, T_j = 150 °C		28	A
i^2t	T_j = 150 °C, 10 ms, sin 180°		370	A^2s
I_{FSM}	10 ms sin 180°	T_j = 25 °C	370	A
		T_j = 150 °C	270	A
T_{jmax}			150	°C

Electrical Characteristics

Symbol	Conditions	min.	typ.	max.	Unit
I_R	T_j = 25 °C, V_{RRM}			0.05	mA
	T_j = 145 °C, V_{RRM}			1.1	mA
V_F	T_j = 25 °C, I_F = 13 A		1	1.21	V
	T_j = 125 °C, I_F = 13 A		0.9	1.1	V
$V_{(TO)}$	T_j = 125 °C			0.83	V
r_T	T_j = 125 °C			12.8	mΩ
t_{rr}	T_j = 25 °C, ± 1 A		20		µs

Thermal Characteristics

Symbol	Conditions	min.	typ.	max.	Unit
T_j		-40		150	°C
T_{stg}		-40		150	°C
T_{solder}	10 min.			250	°C
T_{solder}	5 min.			320	°C
$R_{th(j-s)}$	soldered on 0,38 mm DCB, reference point on copper heatsink close to the chip		1.5		K/W

Mechanical Characteristics

Symbol	Conditions	Values	Unit
Raster size		4.2 x 4.2	mm^2
Area total		17.64	mm^2
Anode		bondable (Al)	
Cathode		solderable (Ag/Ni)	
Wire bond		Al, diameter ≤ 500 µm	
Package		wafer frame	
Chips / Package		848	pcs

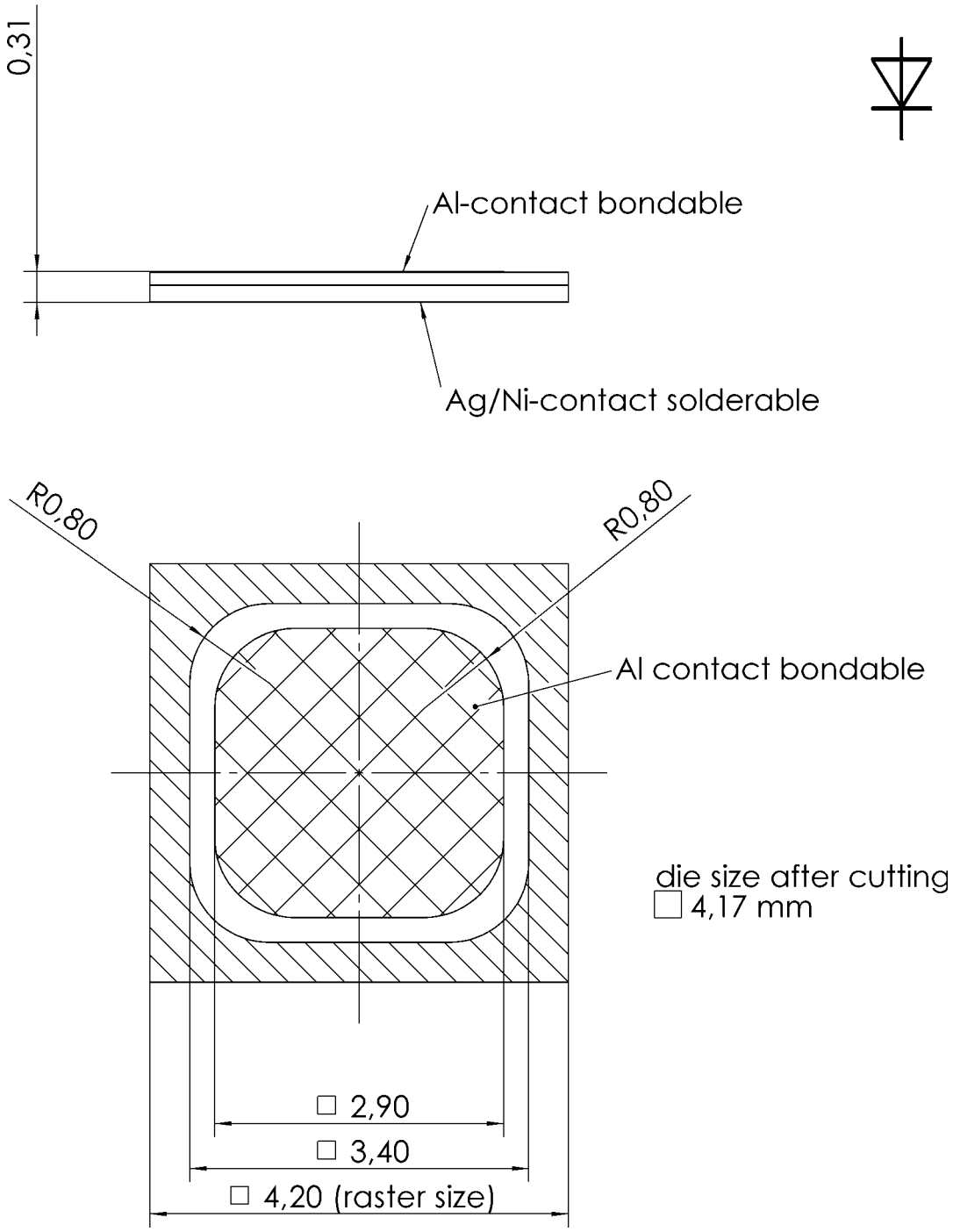

This is an electrostatic discharge sensitive device (ESDS), international standard IEC 60747-1, Chapter IX

* The specifications of our components may not be considered as an assurance of component characteristics. Components have to be tested for the respective application. Adjustments may be necessary. The use of SEMIKRON products in life support appliances and systems is subject to prior specification and written approval by SEMIKRON. We therefore strongly recommend prior consultation of our personal.

 © by SEMIKRON