SKS 1180F W3C 1020 V16



Thyristor Presspack stack

SEMISTACK® CLASSICS - W3C
Three phase reverse parallel thyristor converter

Preliminary Data

Ordering No. 08785204
Description SKS 1180F W3C 1020 V16

Features

- Non-isolated power stacks
- SKT 1200/16
- Heatsink P17/130
- Forced air cooling
- RC circuit included
- Thermal trip included

Typical Applications

- Soft starters

Remarks

This technical information specifies semiconductor devices but promises no characteristics. No warranty or guarantee, expressed or implied, is made regarding delivery, performance or suitability.

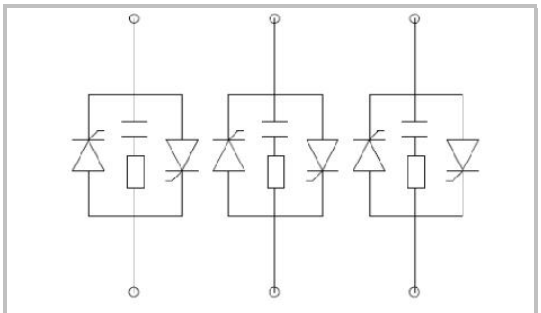

W3C

Electrical Characteristics						
Symbol	**Conditions**		**min**	**typ**	**max**	**Unit**
Electrical Data						
I_{OUT}	Maximum output current	$T_{AMBIENT}$ = 35°C ; No overload		1 180		A_{RMS}
V_{AC}	Maximum AC voltage (+/-10%)			500		V_{AC}
P_{TOTAL}	Maximum stack power			1 020		kW
P_{LOSS}	Stack power loss ($T_{AMBIENT}$ = 35°C)					W

Environnmental Data					
Symbol	**Conditions**	**min**	**typ**	**max**	**Unit**
Mechanical Data					
Drawing	SEMIKRON document number.revision.version		**11121606.02**		-
Weight	Approximate total weight		42.5		kg
Altitude	Installation altitude without derating			1 000	m
Protection	IEC 60529		IP00		-
Pollution Degree	EN 50178		2		-

Fan Data				
Type	SEMIKRON fan designation		**SKF 17A-230-11**	-
V_{FAN}	Fan voltage		230	V_{AC}
f_{FAN}	Fan frequency		50/60	Hz
I_{FAN}	Fan maximum input current		0.36/0.51	A
P_{FAN}	Fan power		81/115	W

Stack Protection					
Symbol	**Conditions**	**min**	**typ**	**max**	**Unit**
RC Circuit					
Type	RC in parallel with each switch		**-**		-
R	Resistance (80W)		33		Ohm
C			0.47		µF

Bimetal Thermal Trip				
T_S	Switching temperature over which thermal trip is open		100	°C
$I_{TC\ MAX}$	Maximum permissible current	at 240VAC	1	A
		at 30VDC	3	A

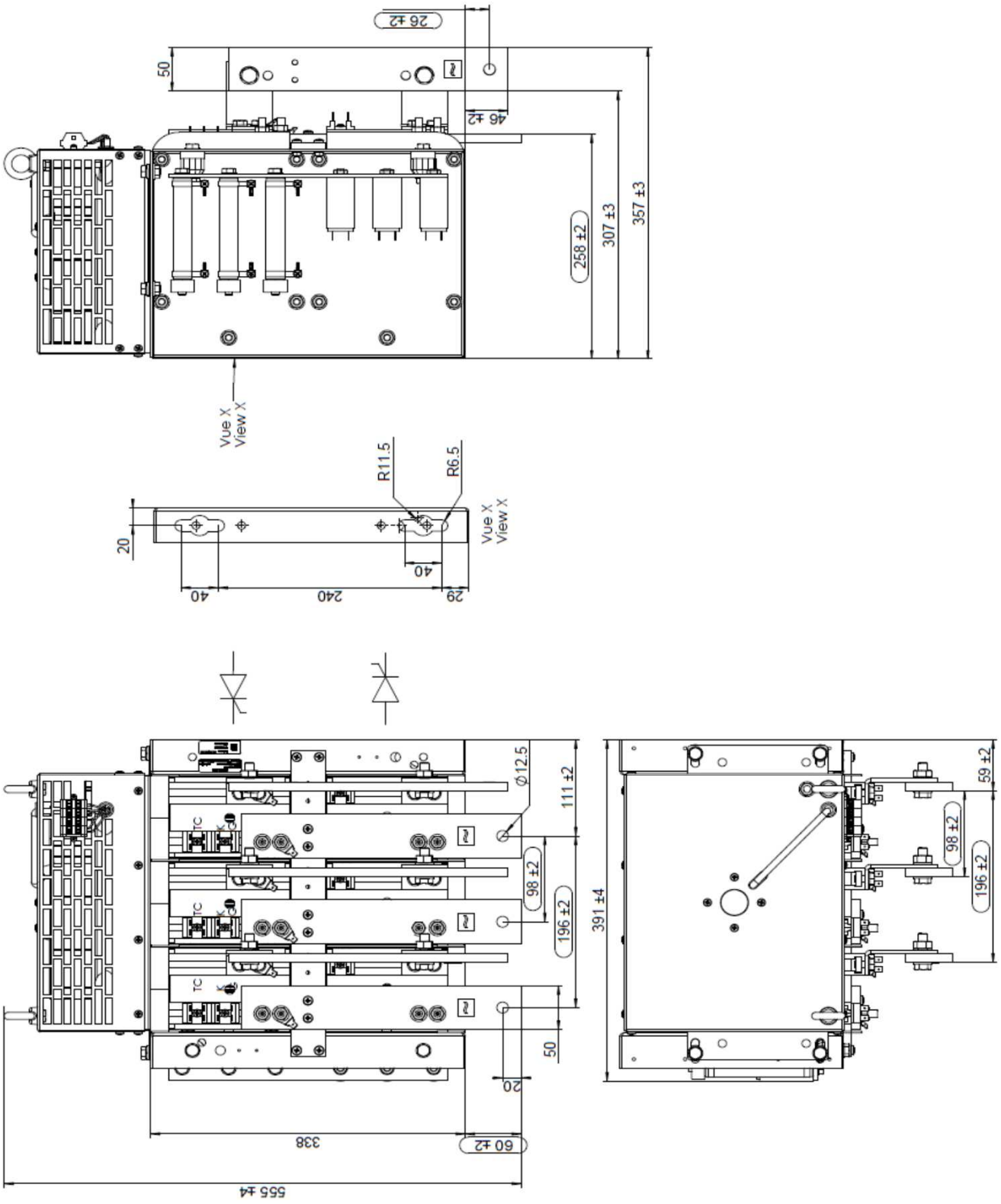

Dimensions

This technical information specifies semiconductor devices but promises no characteristics. No warranty or guarantee expressed or implied is made regarding delivery, performance or suitability.