SKT 13,5 Qu ZG bond.



THYRISTOR

$I_{T(DC)}$ = 185 A

V_{RRM} = 1600 V

Size: 13,5mm x 13,5 mm

Central gate

SKT 13,5 Qu ZG bond.

Features

- high current density due to double mesa technology
- high surge current
- compatible to thick wire bonding
- compatible to all standard solder processes

Typical Applications*

- conrolled rectifier circuits
- solid state relays

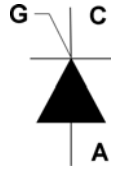

SKT

Absolute Maximum Ratings			
Symbol	**Conditions**	**Values**	**Unit**
V_{RRM}	T_j = 25 °C, I_R = 0.45 mA	1600	V
V_{DRM}	T_j = 25 °C, I_D = 0.45 mA	1600	V
$I_{T(AV)}$	T_c = 80 °C, T_j = 130 °C	145	A
I_{TSM}	T_j = 130 °C, 10 ms, sin 180°	2300	A
i^2t	T_j = 130 °C, 10 ms, sin 180°	26450	A^2s
T_{jmax}		130	°C

Electrical Characteristics					
Symbol	**Conditions**	**min.**	**typ.**	**max.**	**Unit**
V_T	T_j = 130 °C, I_T = 200 A			1.2	V
$V_{T(TO)}$	T_j = 130 °C			0.85	V
r_T	T_j = 130 °C			1.8	mΩ
I_{GT}	T_j = 25 °C			100	mA
V_{GT}	T_j = 25 °C			1.98	V
I_{GD}	T_j = 115 °C	6			mA
V_{GD}	T_j = 130 °C	0.25			V
I_H	T_j = 25 °C			220	mA
I_L	T_j = 25 °C			550	mA

Dynamic Characteristics					
Symbol	**Conditions**	**min.**	**typ.**	**max.**	**Unit**
t_q	T_j = 130 °C		135		µs
$(di/dt)_{cr}$	T_j = 130 °C			200	A/µs
$(dv/dt)_{cr}$	T_j = 130 °C			1000	V/µs

Thermal Characteristics					
Symbol	**Conditions**	**min.**	**typ.**	**max.**	**Unit**
T_j		-40		130	°C
T_{stg}		-40		130	°C
T_{solder}				255	°C
$R_{th(j-c)}$	Semipack 1 assembly		0.23		K/W

Mechanical Characteristics			
Symbol	**Conditions**	**Values**	**Unit**
Raster size		13.5 x 13.5	mm^2
Area total		182	mm^2
Anode		solderable (Ag/Ni)	
Gate and Cathode		bondable (Al)	
Wire bond		Al,diameter ≤ 500µm	
Package		tray	
Chips / Package		25	pcs

SKT 13,5 Qu ZG bond.

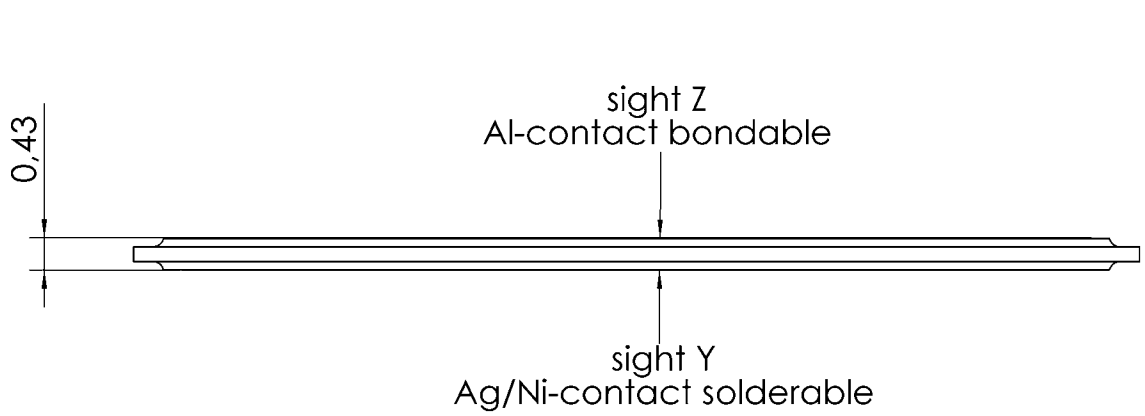

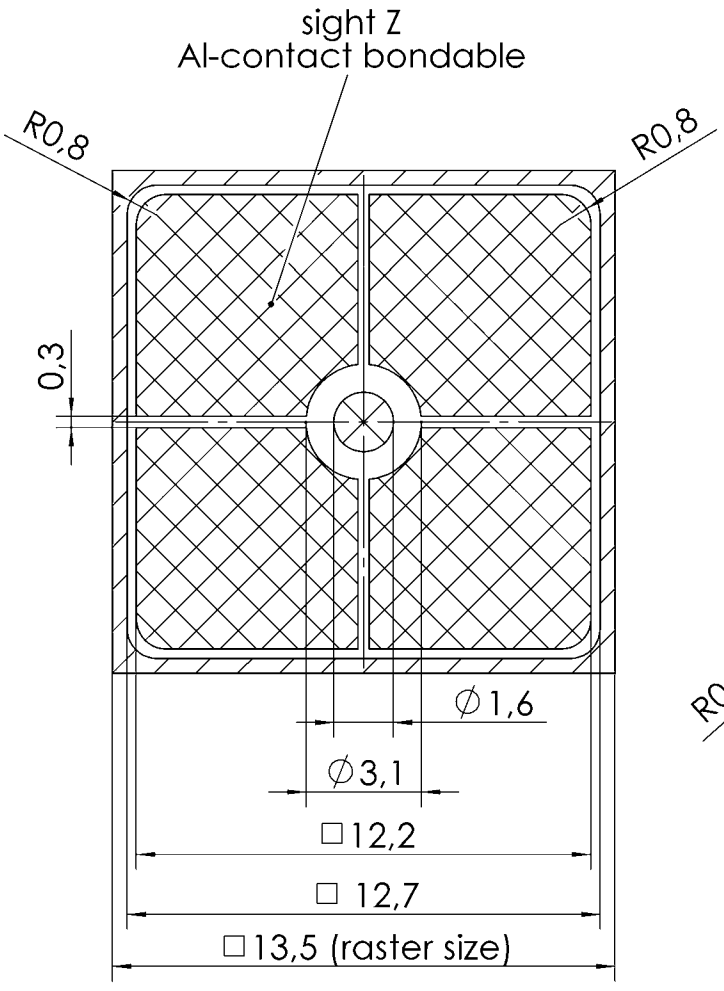

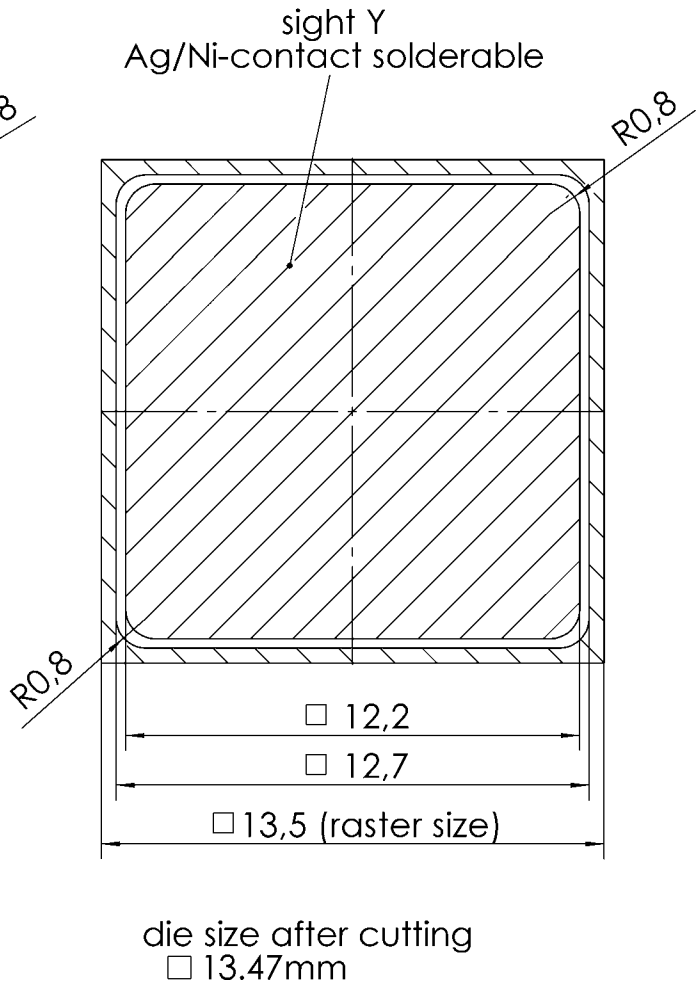

die size after cutting
□ 13.47mm

This is an electrostatic discharge sensitive device (ESDS), international standard IEC 60747-1, Chapter IX

* The specifications of our components may not be considered as an assurance of component characteristics. Components have to be tested for the respective application. Adjustments may be necessary. The use of SEMIKRON products in life support appliances and systems is subject to prior specification and written approval by SEMIKRON. We therefore strongly recommend prior consultation of our personal.